# Serie DGVC_TR



MOTORIZED CIRCULAR DIFFUSER WITH VARIABLE GEOMETRY

(+34) 91 3235805
(+34) 91 3235703
www.difair.es
info@difair.es
Avd. del Cno. de lo Cortao, 28A, Nave 1
28703 San Sebastián de los Reyes, Madrid.



## DESCRIPTION

Motorized circular swirl diffuser with variable geometry, featuring an external cone made of aluminum and an internal cone and blades made of steel with an epoxy paint finish. It includes models ranging from Ø200 to Ø800, and its movable blades are adjusted simultaneously by the built-in servomotor between 0° (fully open) and 90° (fully closed) to control temperature and airflow.

## FINISH

- White-LACQUERED Steel Diffuser.
- On request, it can be manufactured in other colors from the **RAL** color chart.

## FIXING SYSTEM

- Directly into the duct or via a coupling sleeve.

## ACCESSORIES

- Connection plenum box with regulation control and equalizing plate.

## FEATURES

Depending on the blades angle setting, you can get a stream of warm air (angle from 0° to 45°) or a stream of cold air (angle from 45° to 90°).

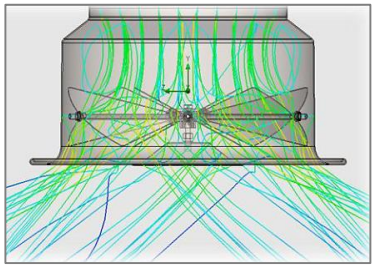

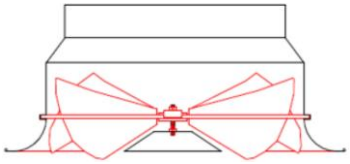

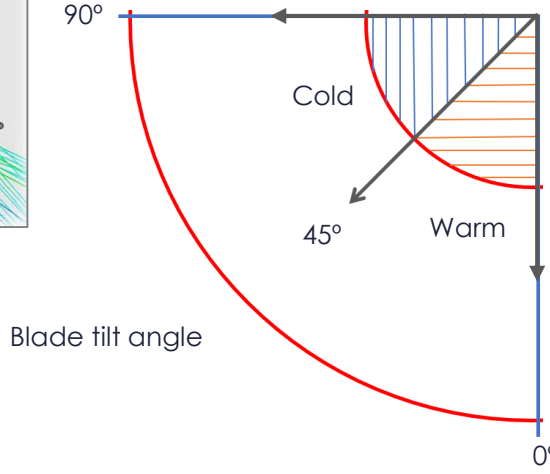


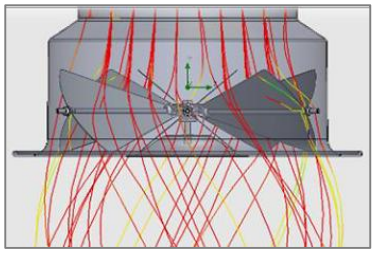

# INSTALLATION

Plenum box mounting

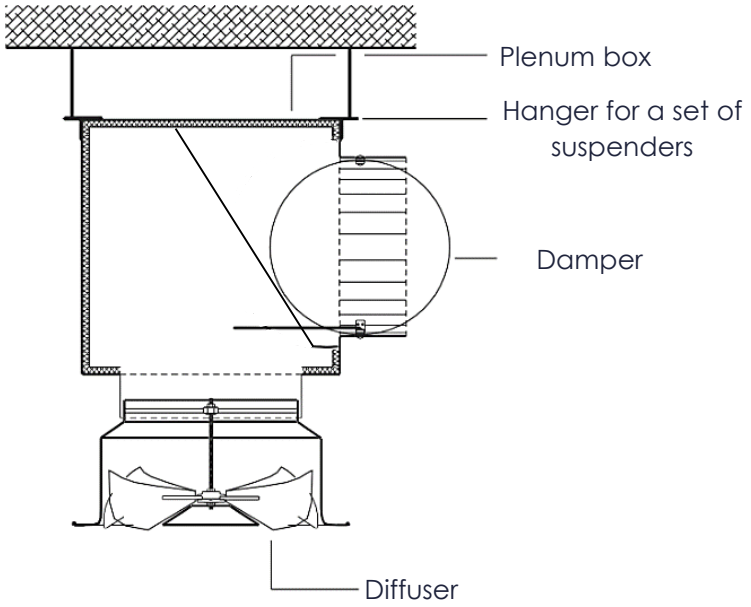


Assembly with a coupling sleeve

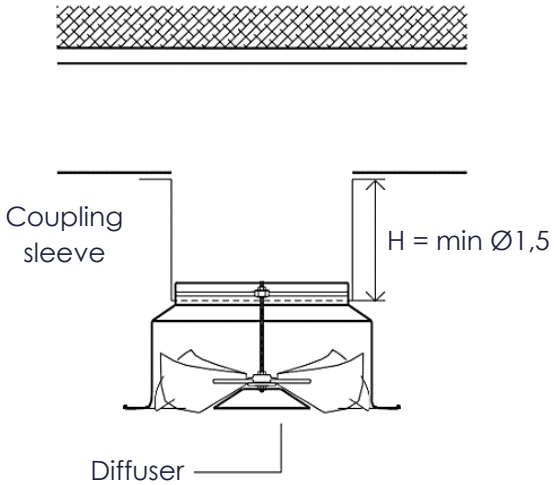


Installation with a flexible tube

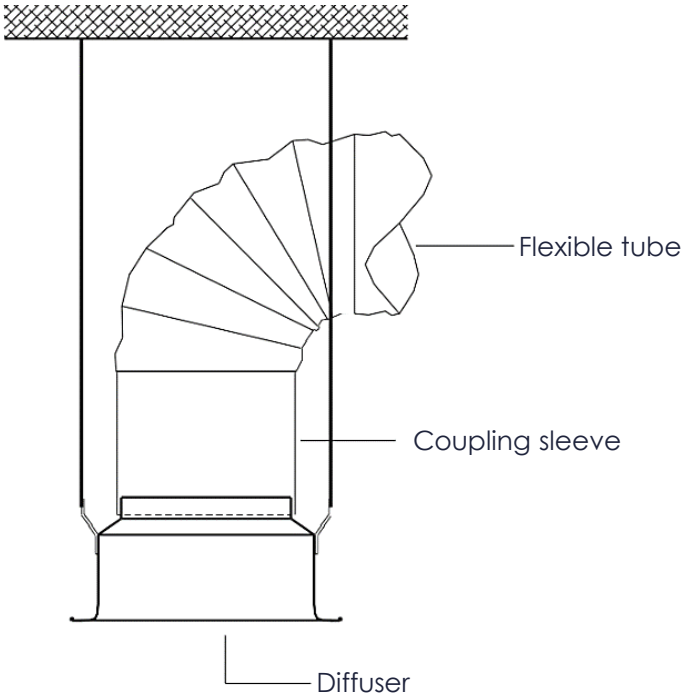


Installation in a circular duct with a coupling sleeve

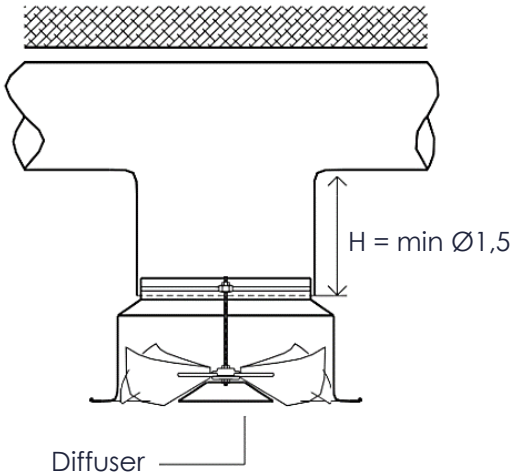

## DIMENSIONS

**DDGVC160/630TR**

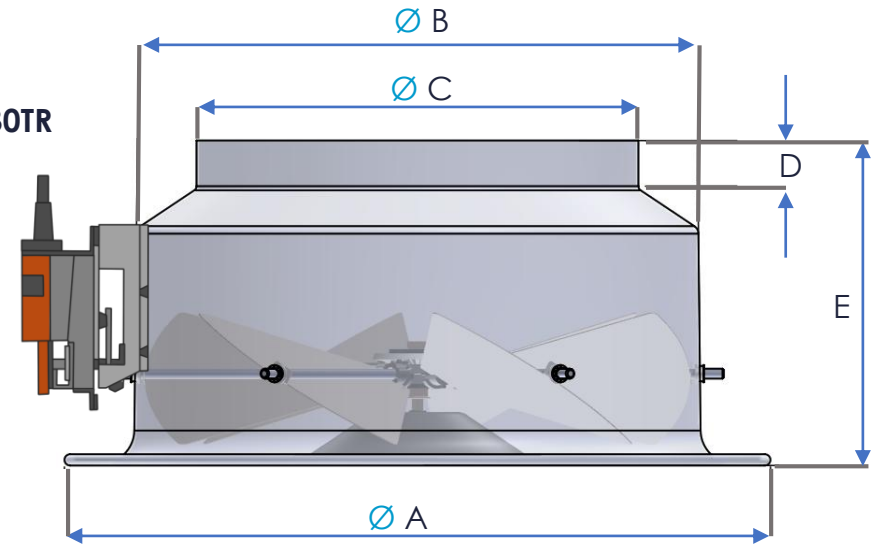


**DDGVC800TR**

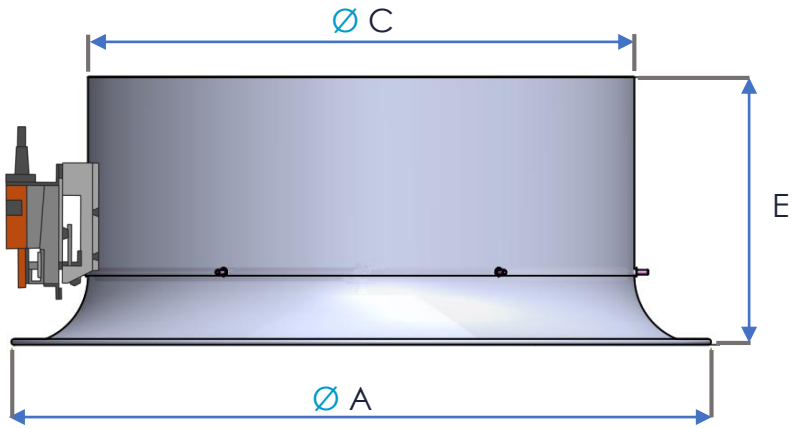


| Nominal Size | ØA | ØB | ØC | D | E | ØR |
|---|---|---|---|---|---|---|
| **200** | 350 | 248 | 198 | 40 | 180 | 310 |
| **250** | 400 | 298 | 248 | 40 | 205 | 350 |
| **315** | 500 | 398 | 313 | 40 | 230 | 450 |
| **400** | 615 | 465 | 398 | 60 | 270 | 555 |
| **500** | 353 | 565 | 498 | 60 | 320 | 720 |
| **630** | 398 | 665 | 628 | 80 | 390 | 855 |
| **800** | 1020 | --- | 798 | --- | 390 | 960 |

Ø R = Ceiling hole

## Plenum

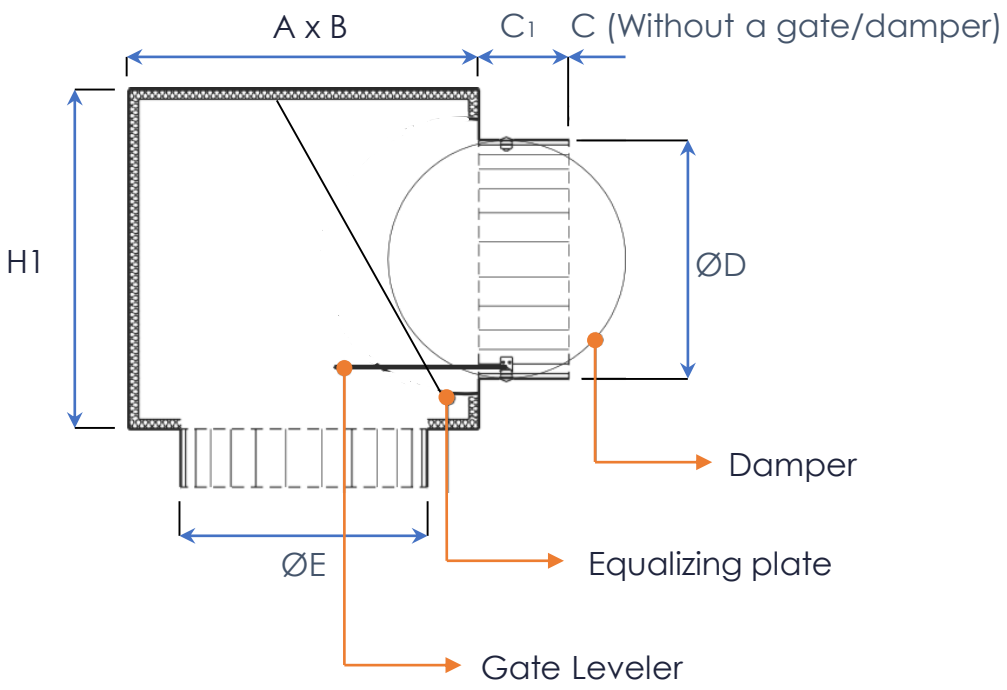


## PLENUM DIMENSIONS TABLE

| PLENUM | AxB | C | C1 | ØD | ØE | H1 | Nº Piezas |
|---|---|---|---|---|---|---|---|
| **PLERC160** | 250x250 | 60 | 60 | 156 | 162 | 250 | 1 |
| **PLERC200** | 300x300 | 60 | 60 | 196 | 202 | 300 | 1 |
| **PLERC250** | 350x350 | 60 | 60 | 246 | 252 | 350 | 1 |
| **PLERC315** | 400x400 | 60 | 60 | 311 | 317 | 400 | 1 |
| **PLERC400** | 500x500 | 90 | 90 | 396 | 402 | 500 | 1 |
| **PLERC500** | 600x600 | 100 | 100 | 496 | 503 | 600 | 1 |
| **PLERC630** | 730x730 | 100 | 100 | 600 | 633 | 730 | 1 |
| **PLERC800** | 900x900 | 90 | 90 | 396x2 | 803 | 900 | 2 |

## QUICK SELECTION TABLE

| Model | Flow (Q) m3/h | Mounting Height H (m) | Low Temperature | | | | High Temperature | | | |
|---|---|---|---|---|---|---|---|---|---|---|
| | | | ΔT (°C) | Inclinación Lamas (°) | Static pressure ΔP (mm.ca) | NR dB(A) | ΔT (°C) | Blade Angle (°) | Static pressure ΔP (mm.ca) | NR dB(A) |
| **200** | 300 | 4 | -10 | 47 | 0,73 | 34 | 10 | 35 | 0,48 | 32 |
| **250** | 400 | 4 | -10 | 47 | 0,51 | 30 | 10 | 34 | 0,32 | 28 |
| **160** | 300 | 4,5 | -10 | 46 | 1,64 | 48 | 10 | 37 | 1,18 | 47 |
| **200** | 400 | 4,5 | -10 | 48 | 1,36 | 43 | 10 | 36 | 0,87 | 41 |
| **250** | 500 | 4,5 | -10 | 47 | 0,8 | 37 | 10 | 34 | 0,51 | 35 |
| **315** | 600 | 4,5 | -10 | 43 | 0,39 | 26 | 10 | 32 | 0,28 | 25 |
| **250** | 600 | 6 | -10 | 44 | 1,02 | 42 | 10 | 22 | 0,56 | 39 |
| **315** | 800 | 6 | -10 | 41 | 0,65 | 34 | 10 | 27 | 0,44 | 33 |
| **315** | 1200 | 6 | -10 | 47 | 1,84 | 49 | 10 | 39 | 1,36 | 48 |
| **400** | 1500 | 6 | -10 | 43 | 0,96 | 42 | 10 | 34 | 0,72 | 41 |
| **400** | 1800 | 6 | -10 | 46 | 1,56 | 48 | 10 | 39 | 1,2 | 48 |
| **500** | 2000 | 6 | -10 | 51 | 0,97 | 41 | 10 | 33 | 0,5 | 36 |
| **400** | 2500 | 8 | -10 | 45 | 2,89 | 58 | 10 | 38 | 2,24 | 57 |
| **500** | 3000 | 8 | -10 | 51 | 2,18 | 53 | 10 | 35 | 1,18 | 49 |
| **500** | 3500 | 8 | -10 | 53 | 3,3 | 59 | 10 | 39 | 1,81 | 54 |
| **630** | 3500 | 8 | -10 | 50 | 1,15 | 41 | 10 | 28 | 0,55 | 36 |
| **630** | 4000 | 8 | -10 | 52 | 1,66 | 47 | 10 | 33 | 0,8 | 41 |
| **630** | 5000 | 8 | -10 | 54 | 2,89 | 55 | 10 | 39 | 1,5 | 50 |
| **800** | 6000 | 8 | -10 | 52 | 1,31 | 45 | 10 | 27 | 0,55 | 38 |
| **800** | 7000 | 8 | -10 | 54 | 1,99 | 52 | 10 | 33 | 0,87 | 45 |
| **800** | 8000 | 8 | -10 | 55 | 2,75 | 56 | 10 | 37 | 1,27 | 50 |
| **400** | 3000 | 10 | -10 | 43 | 3,85 | 63 | 10 | 35 | 2,95 | 62 |
| **500** | 3500 | 10 | -10 | 50 | 2,82 | 57 | 10 | 31 | 1,44 | 52 |
| **500** | 4000 | 10 | -10 | 51 | 3,88 | 62 | 10 | 35 | 2,09 | 57 |
| **630** | 4500 | 10 | -10 | 50 | 1,9 | 49 | 10 | 27 | 0,88 | 43 |
| **630** | 5500 | 10 | -10 | 52 | 3,14 | 57 | 10 | 34 | 1,56 | 51 |
| **800** | 6000 | 10 | -10 | 48 | 1,08 | 42 | 10 | 11 | 0,44 | 36 |
| **800** | 7000 | 10 | -10 | 51 | 1,69 | 49 | 10 | 21 | 0,67 | 42 |
| **800** | 8000 | 10 | -10 | 53 | 2,46 | 55 | 10 | 28 | 1 | 47 |
| **800** | 10000 | 10 | -10 | 55 | 4,29 | 63 | 10 | 35 | 1,87 | 56 |

- Values calculated based on an occupied zone height of 1.8 m. Terminal speed V = 0.25 m/s. Noise level in the room without sound absorption, in NR (dBA).

## GRAPHICAL DESCRIPTION

| Series | Model | | Finish | Accessories |
|---|---|---|---|---|
| | 200 | 500 | LB | PLE |
| DGVC_TR | 250 | 630 | RAL | |
| | 315 | 800 | | |
| | 400 | | | |




## DESCRIPTION

**SERIES**

- DGVC_TR: Motorized circular diffuser with variable geometry.

**MODEL**

- DGVC250TR: Motorized circular diffuser with variable geometry, model "250".

**FINISH**

- LB: White laquered.

**ACCESSORIES** (optional)

- PLE200: Plenum box for motorized circular diffuser with variable geometry, model "250".

**Order example: DGVC250TR-LB+PLE250**

- To order a motorized circular swirl diffuser with variable geometry, model "250". White laquered and plenum box, you should request:

| Order | Description |
|---|---|
| Diffuser DGVC250TR-LB | Motorized circular swirl diffuser with variable geometry, model "250". White laquered. |
| Plenum box PLE250 | Connection plenum with control damper and equalizing plate for DGVC250TR. |

**Order example: DGVC315TR-LB**

- To order a motorized circular swirl diffuser with variable geometry, model "315". White laquered, you should request:

| Order | Description |
|---|---|
| 1 Diffuser DGVC315TR-LB | Motorized circular swirl diffuser with variable geometry, model "315". White laquered. |



Any element of this document may be subject to change without notice from Manufacturas Difair-Clima, S.L. CONTAINS INTELLECTUAL PROPERTY. Any partial or total reproduction of the contents without the express authorization of Manufacturas DIFAIR-CLIMA, S.L. is prohibited.
The information contained in this document is based on careful testing and experience. It reflects our knowledge and is for guidance purposes only. It is provided in good faith and the user should satisfy himself that the product is fit for use prior to any application. The values quoted are averages and should not be taken as maximum or minimum values for specific purposes. The manufacturer and distributor are not responsible for any non-recommended use or consequential damage.
THE INFORMATION PROVIDED IN THIS DOCUMENT SUPERSEDES ALL PREVIOUS VERSIONS OF THIS DOCUMENT.

(+34) 91 3235805
(+34) 91 3235703
www.difair.es
info@difair.es
Manufacturas Difair-Clima, S.L.
Avd. del Cno de lo Cortao, 28A, Nave 1
28703 San Sebastián de los Reyes, Madrid.