Difair

Serie
DGVC_AT



CIRCULAR THERMOSTATIC DIFFUSER WITH VARIABLE GEOMETRY

(+34) 91 3235805
(+34) 91 3235703

www.difair.es

info@difair.es

Avd. del Cno. de lo Cortao, 28A, Nave 1
28703 San Sebastián de los Reyes, Madrid.



DESCRIPTION

The diffuser blades are adjusted automatically (without an electrical power source) via a thermostatic actuator made of special nickel-titanium shape-memory materials. Adjusting the deflection angle is very simple and intuitive, using mechanical stops assisted by a color-coded scale. The color of the graduated scale indicates the angle of the blades in the two operating modes (heat and cool): red for heating mode and blue for cooling mode.

The diffuser does not need to be pre-adjusted at the outset. Suitable for installation at heights ranging from 3.5 to 26 m, they can be mounted in a duct, on the ceiling, or in a plenum, and can be adjusted afterward.

ACCESSORIES

- **Plenum Box** with damper and equalizing plate.

FINISH

- White lacquered diffuser (RAL 9010).
- On request, it can be manufactured in other colors from the RAL color chart.

FIXING SYSTEM

- Directly into the duct or via a coupling sleeve.

FEATURES

When the supply air is warm (heating mode), the actuator will direct the airflow downward. Conversely, when the supply air is cold (cooling mode), the actuator will direct the airflow horizontally, following the previously set deflection angle.

The diffuser operates within a temperature range of 15°C to 40°C.

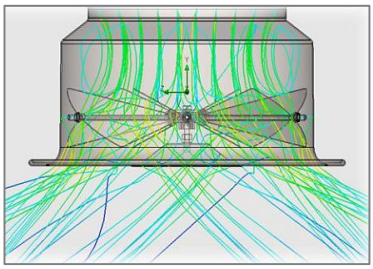

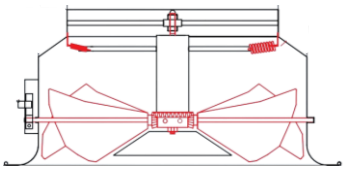

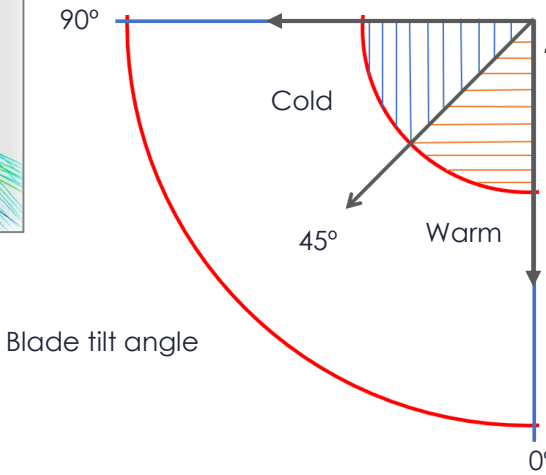

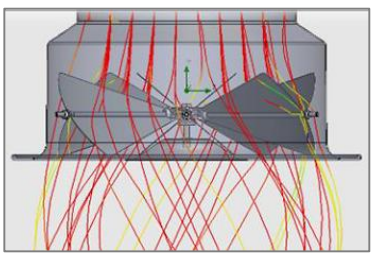

AIR IMPULSE

Heating Mode

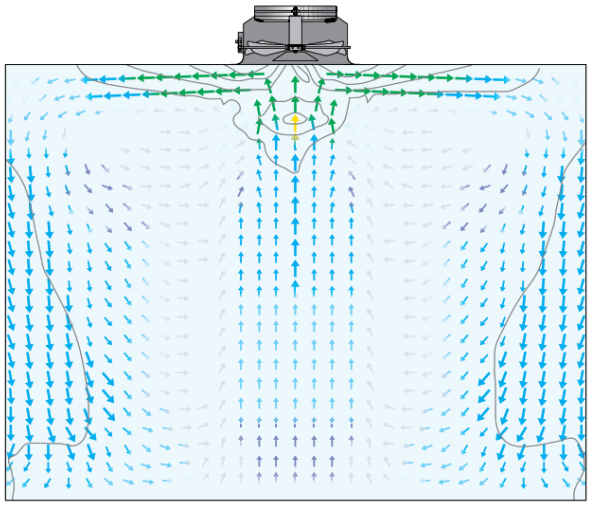

Cooling Mode

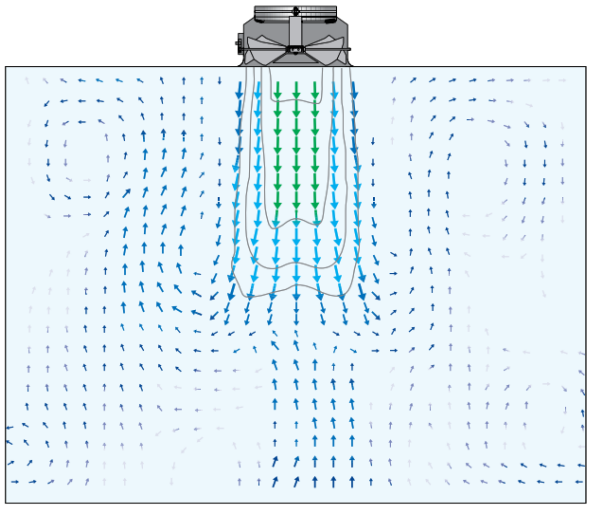

Heating mode

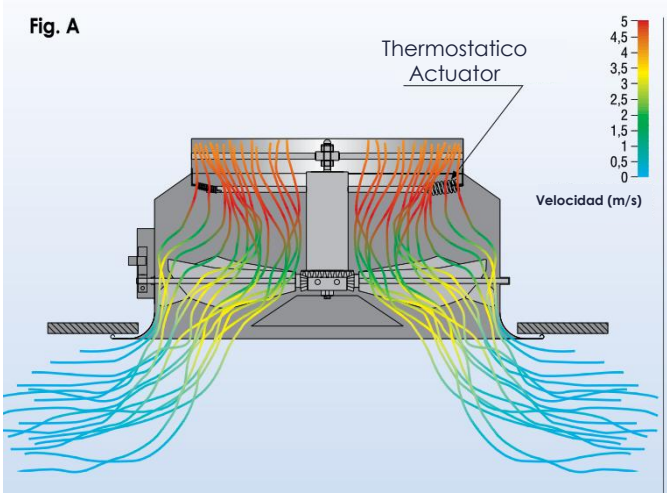

Cooling Mode

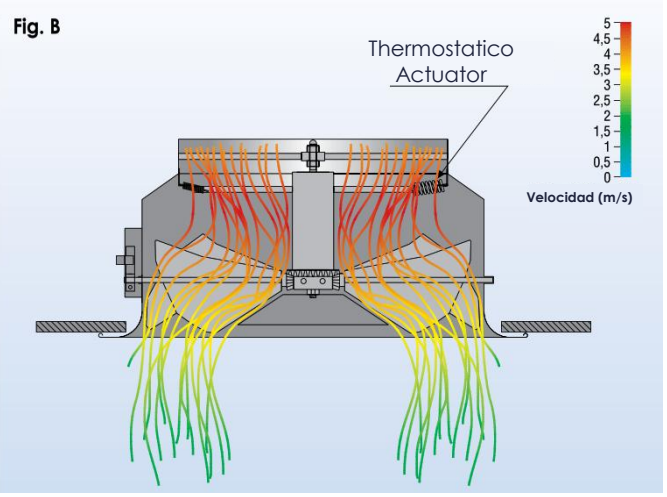

Figures "**A**" and "**B**" show the diffuser's behavior under different air flow patterns.

Figure "**A**" shows that, during cooling, the actuator adjusts the angle of the louvers, creating a horizontal airflow that enhances the "Coanda" effect.

Figure "**B**" shows that the actuator adjusts the angle of the louvers as soon as the temperature rises, creating a vertical airflow that directs warm air toward the occupied zone.

QUICK SELECTION CHART

Sound level and air flow

Model

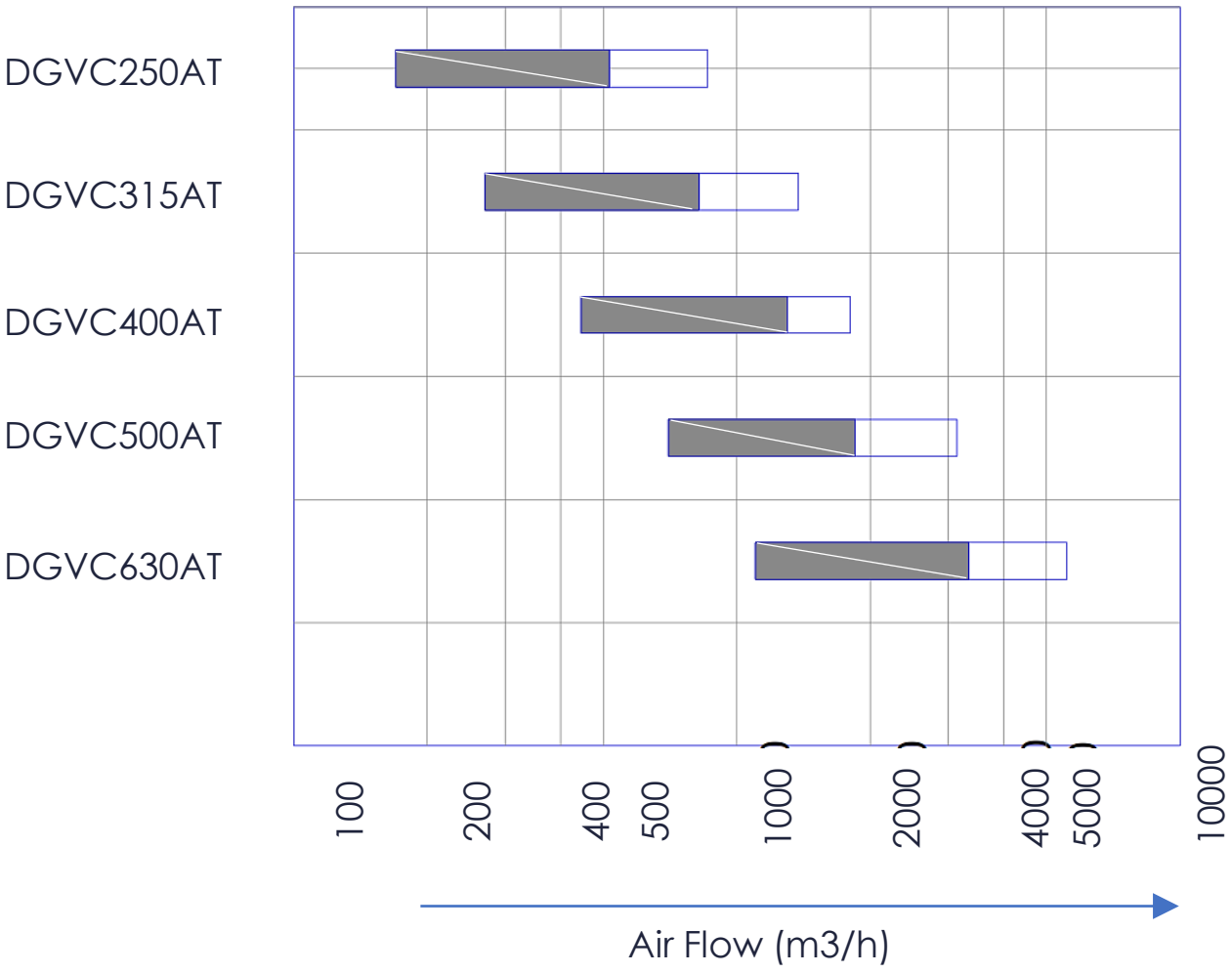

Blade angle 45°

35 < Lw (dB(A)) < 20

50 < Lw (dB(A)) < 35

QUICK SELECTION CHART

Nominal mounting height:

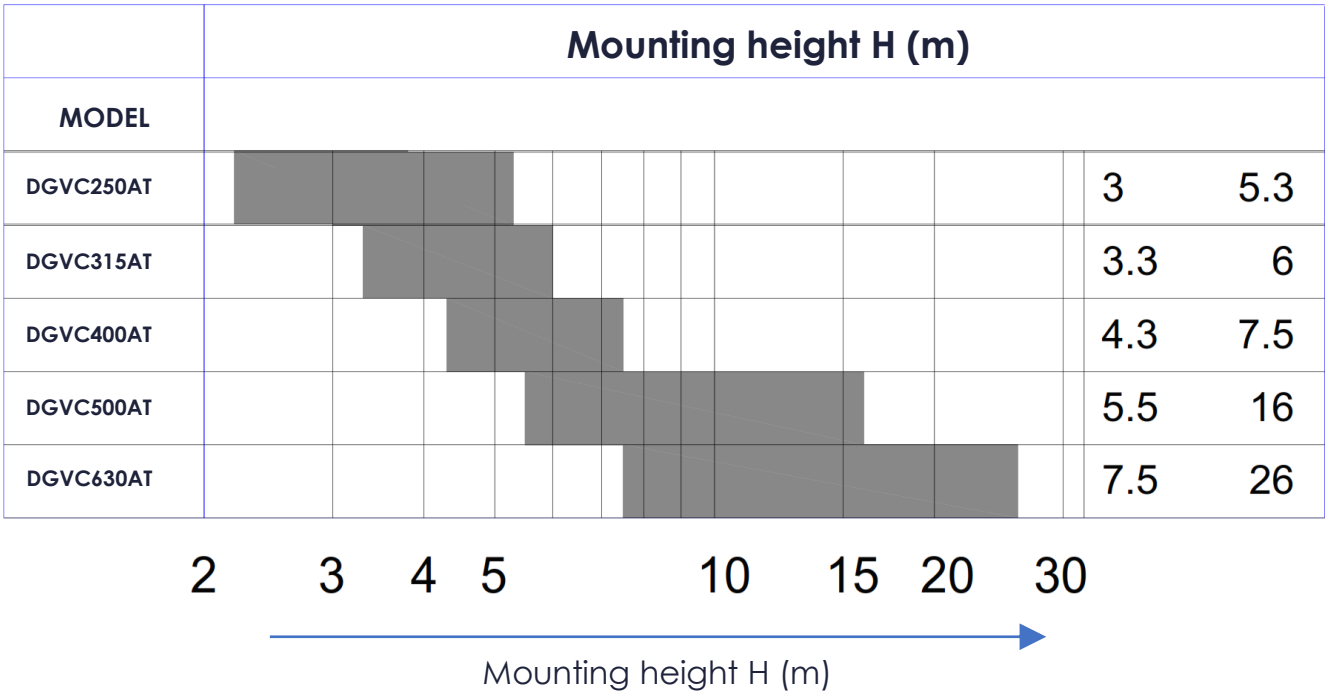

Minimum distance A:

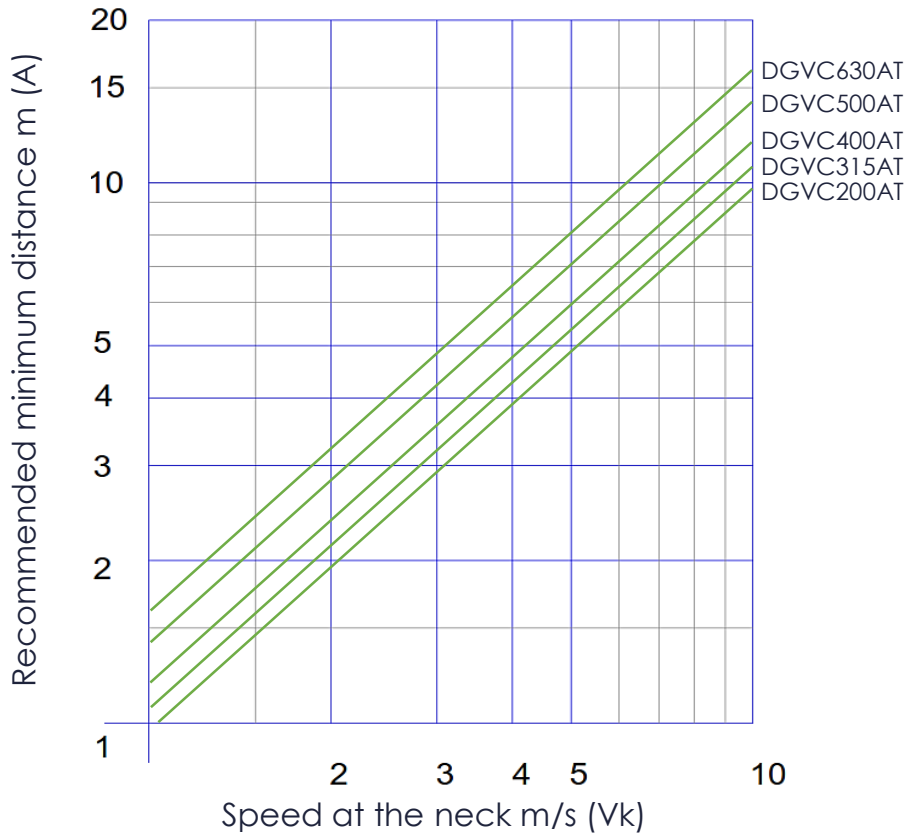

BLADES ANGLE ADJUSTMENT: DGVC250AT

Cooling:

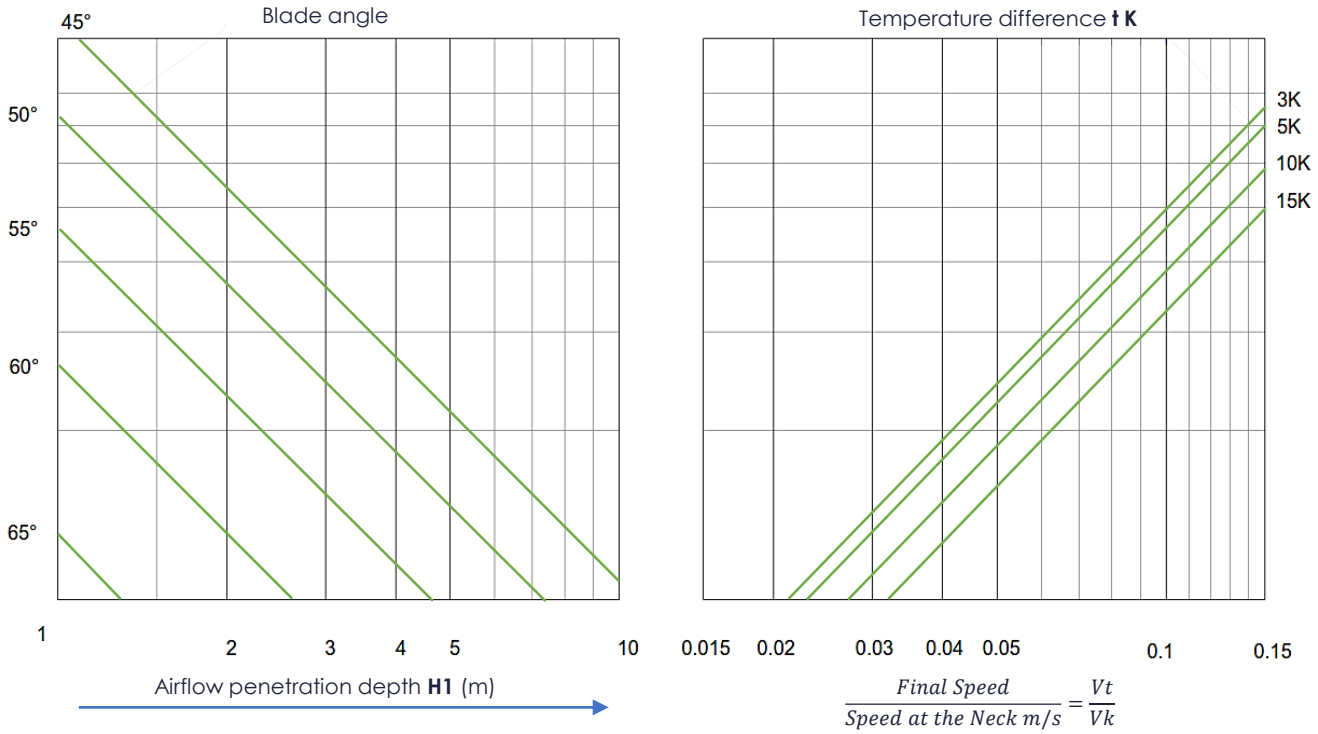

Heating:

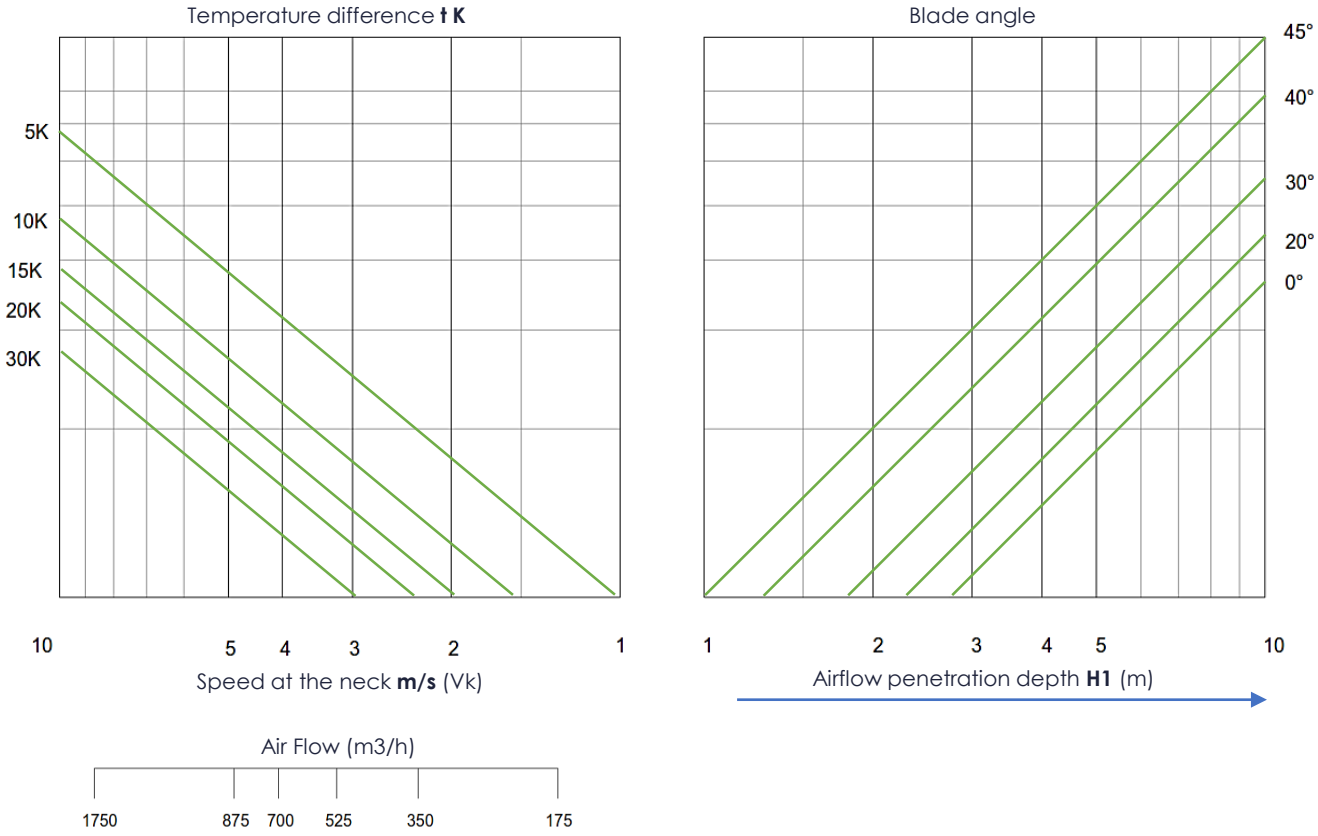

BLADES ANGLE ADJUSTMENT: DGVC315AT

Cooling:

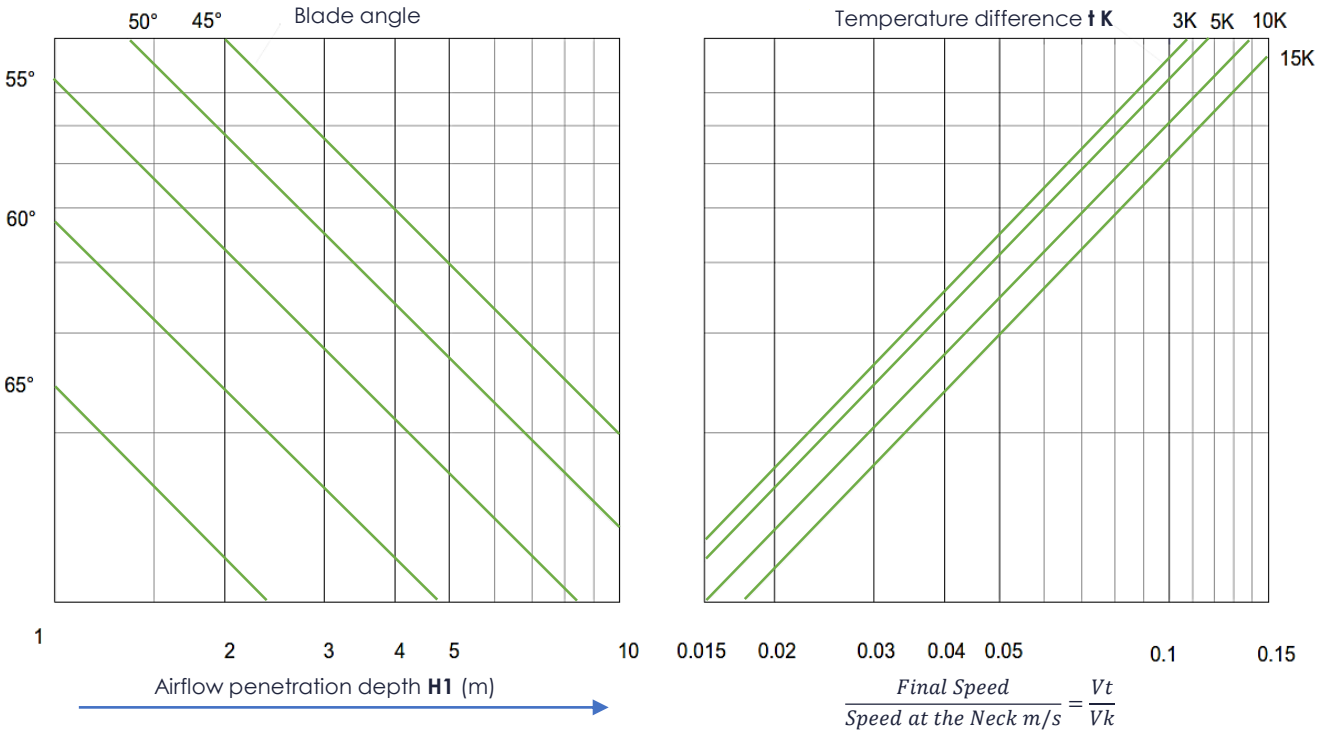

Heating:

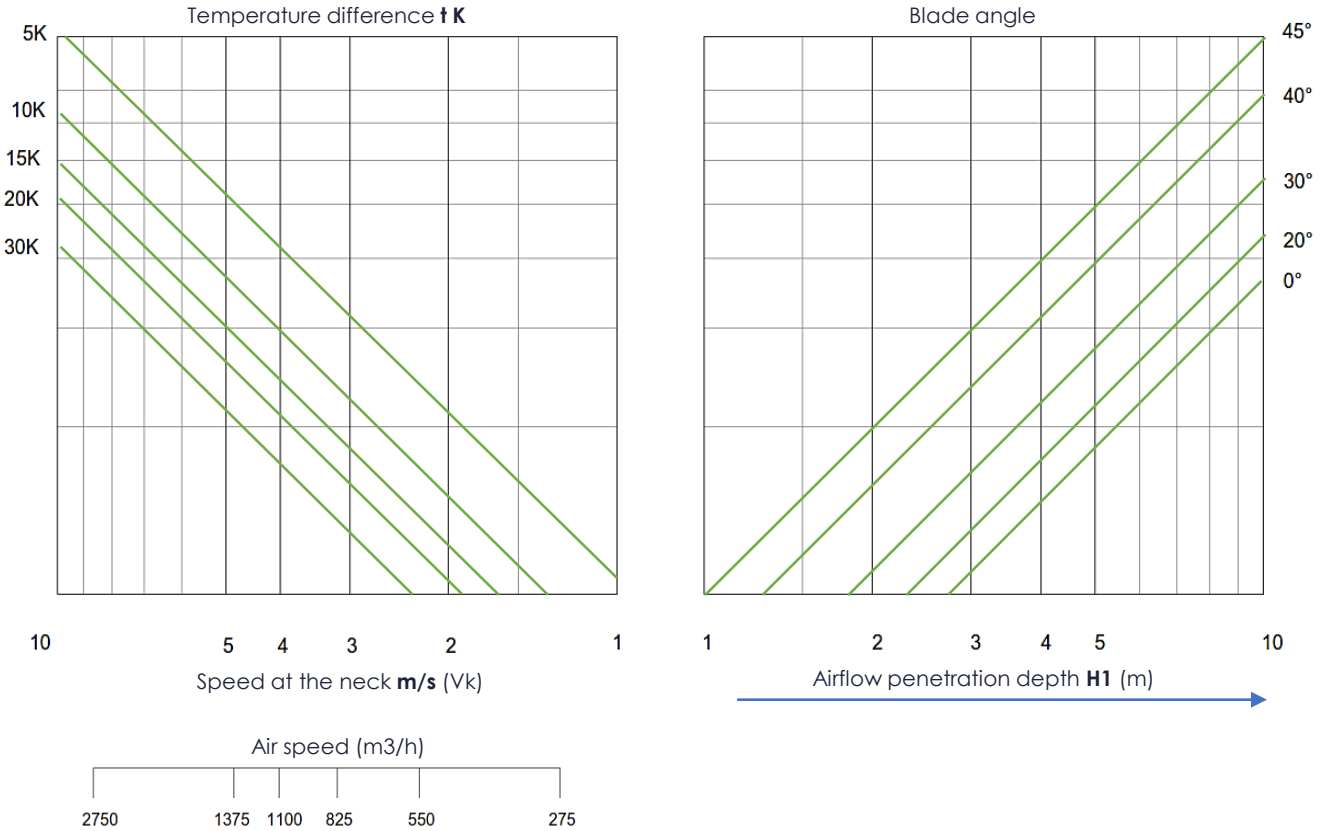

BLADES ANGLE ADJUSTMENT: DGVC400AT

Cooling:

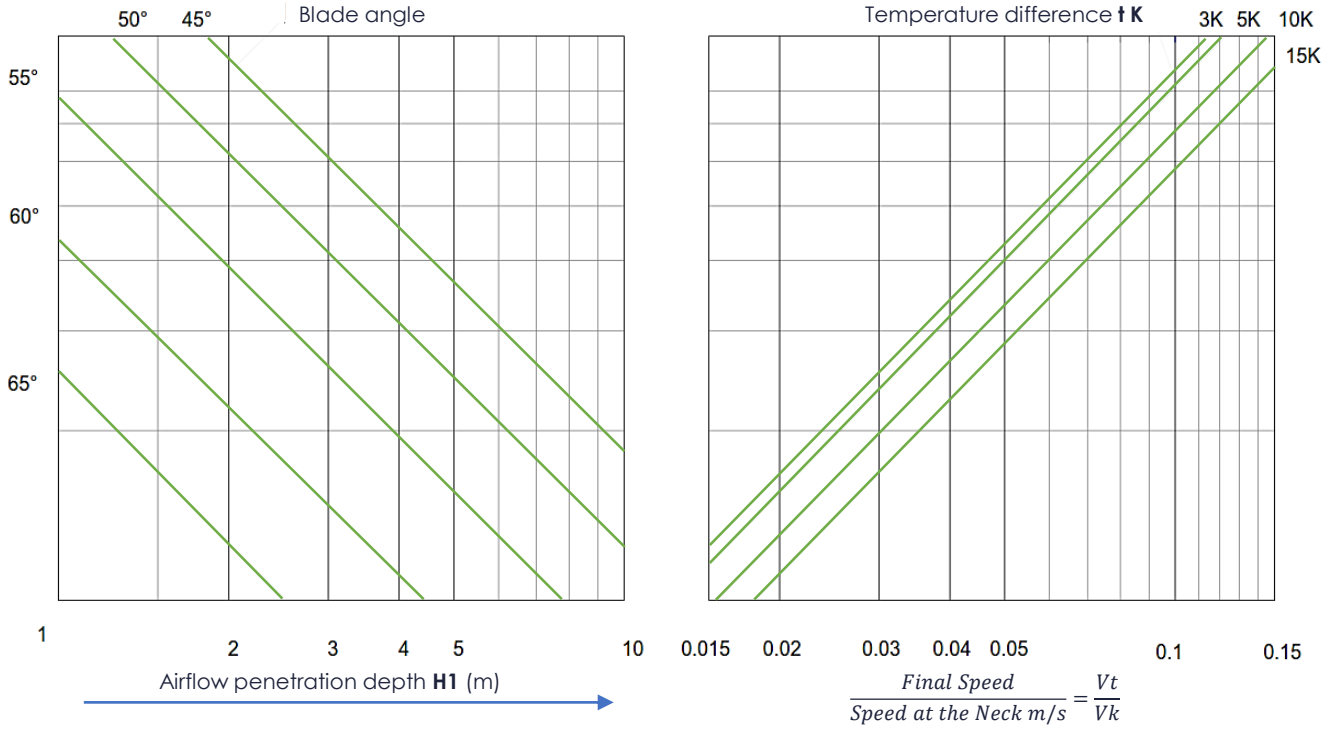

Heating:

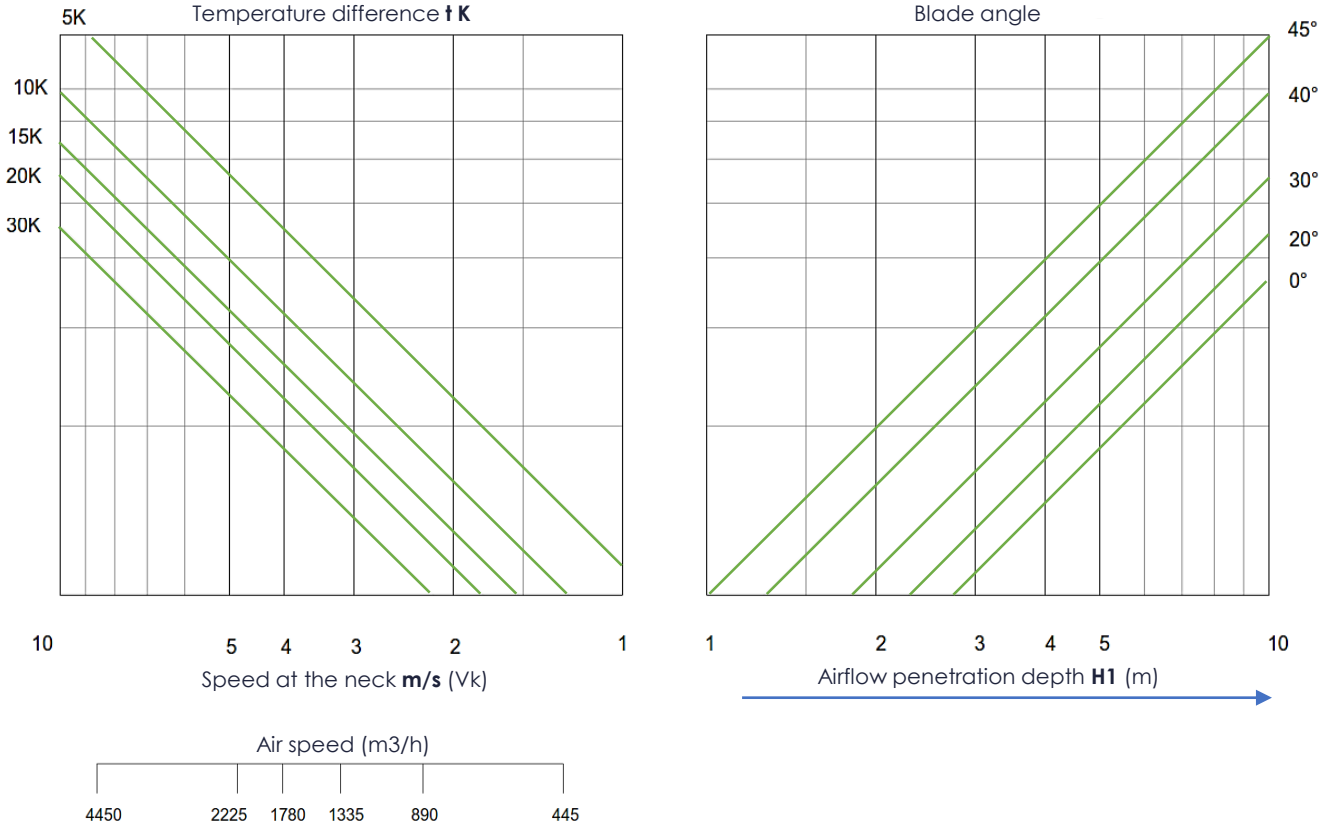

BLADES ANGLE ADJUSTMENT: DGVC500AT

Cooling:

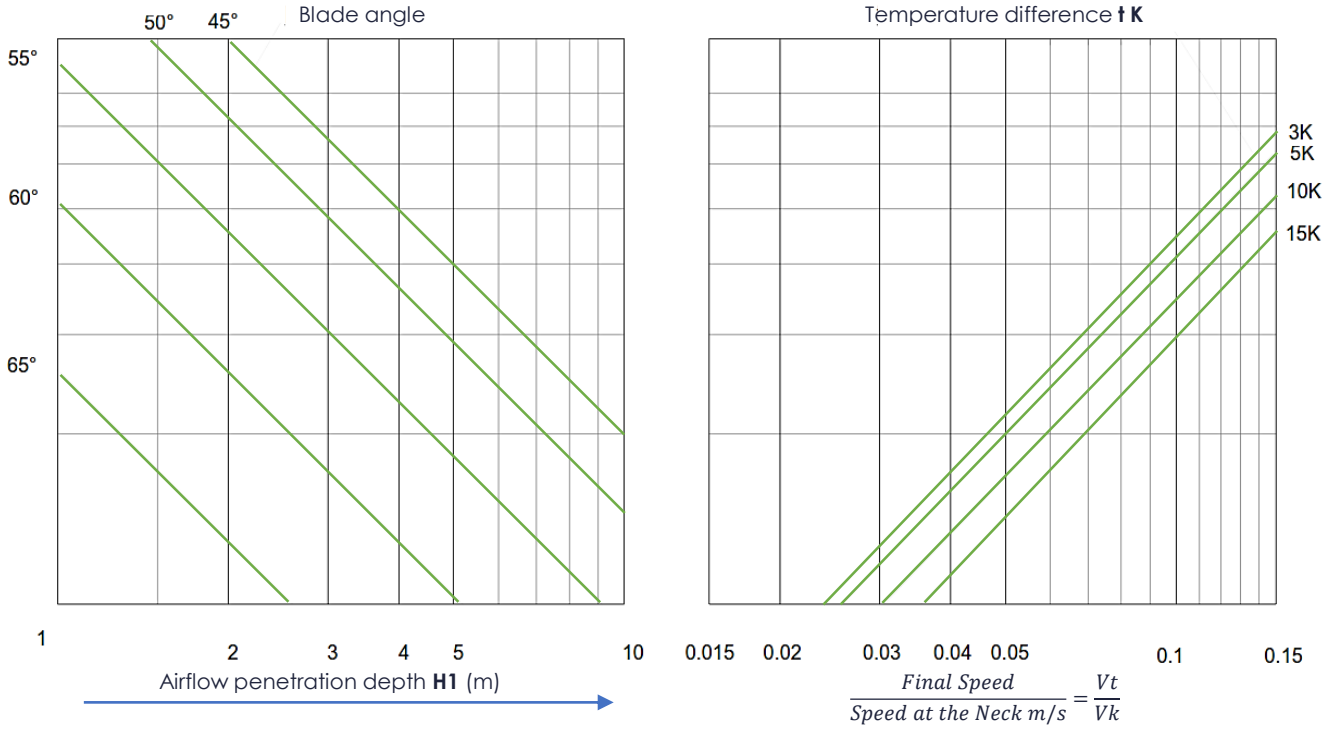

Heating:

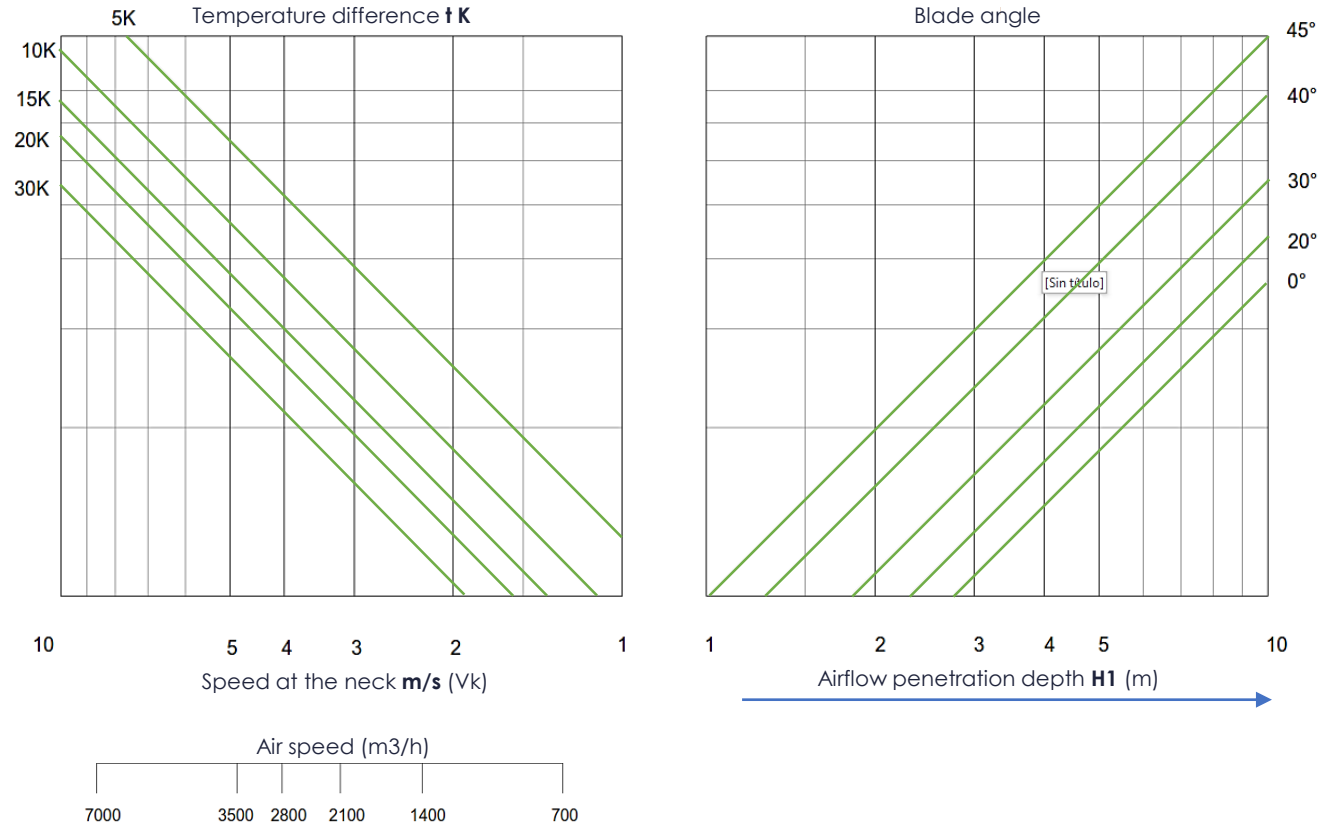

BLADES ANGLE ADJUSTMENT: DGVC630AT

Cooling:

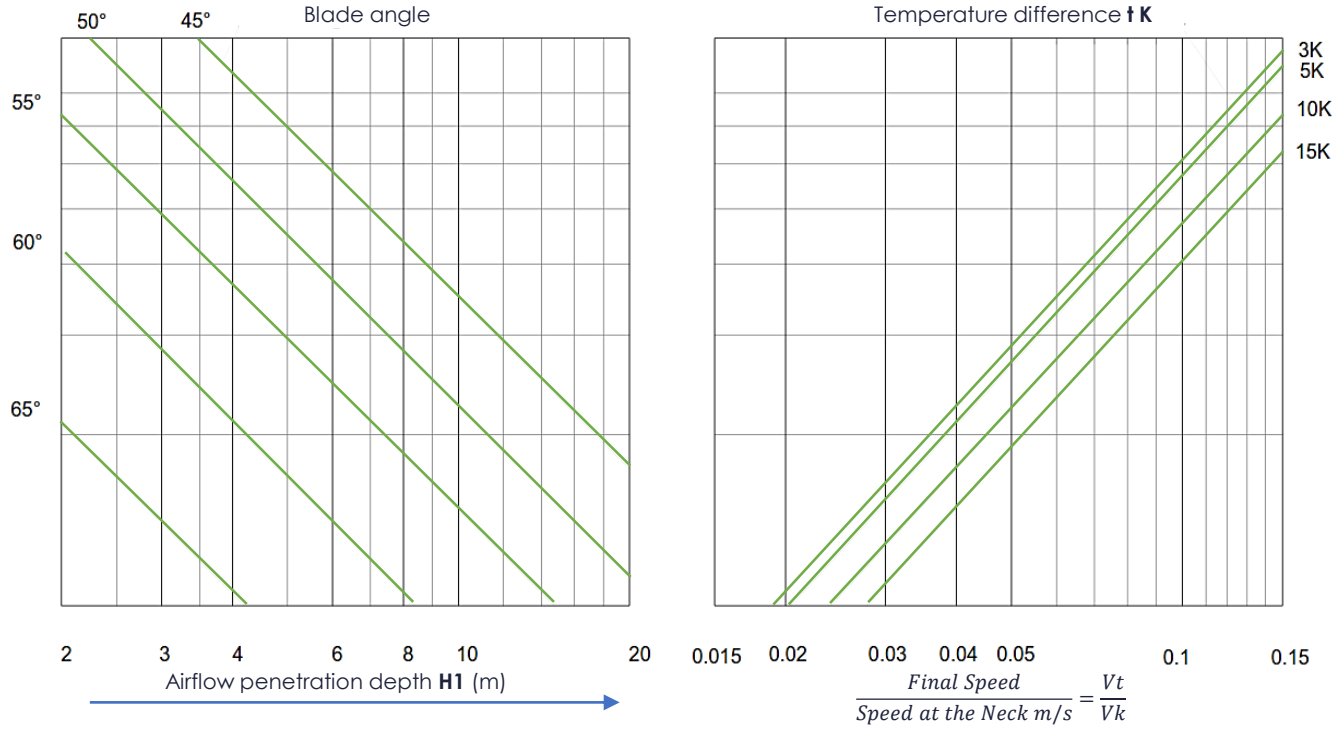

Heating:

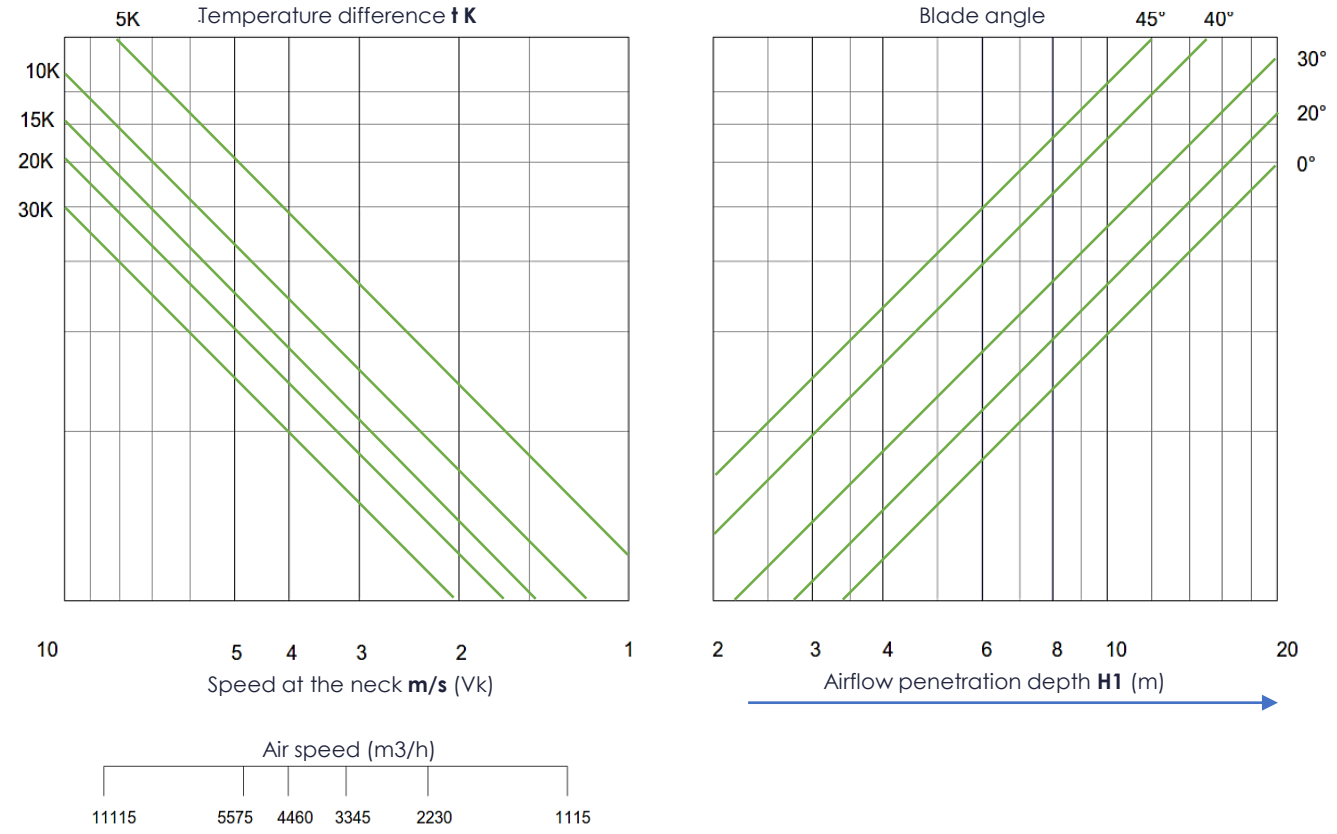

INSTALLATION

Plenum mounting

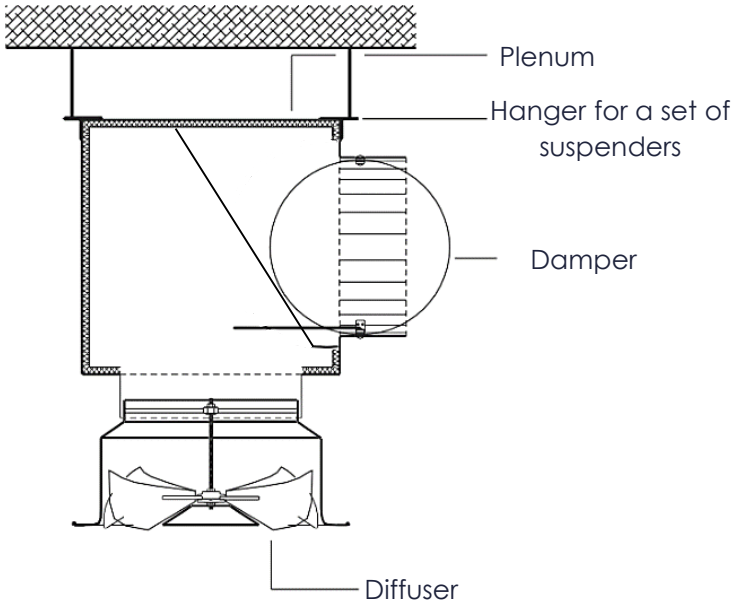

Assembly with a coupling sleeve

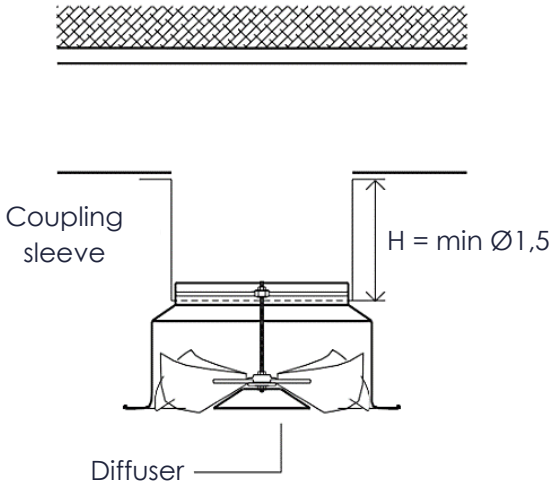

Installation with flexible tube

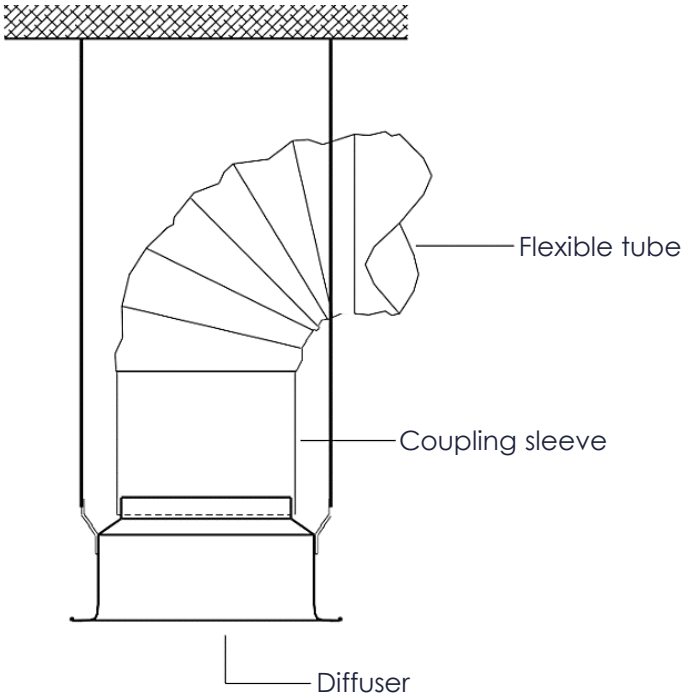

Installation in a circular duct with a couplin sleeve

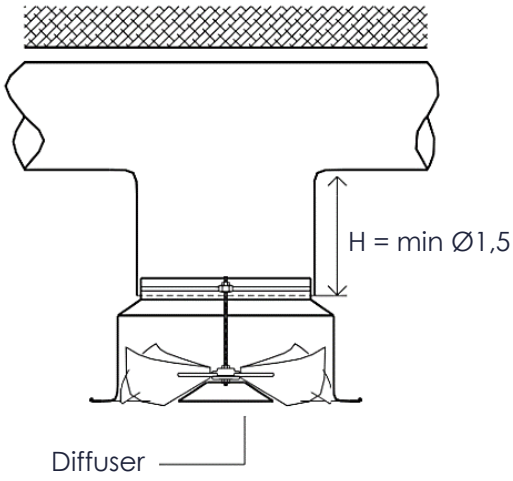

DIMENSIONS

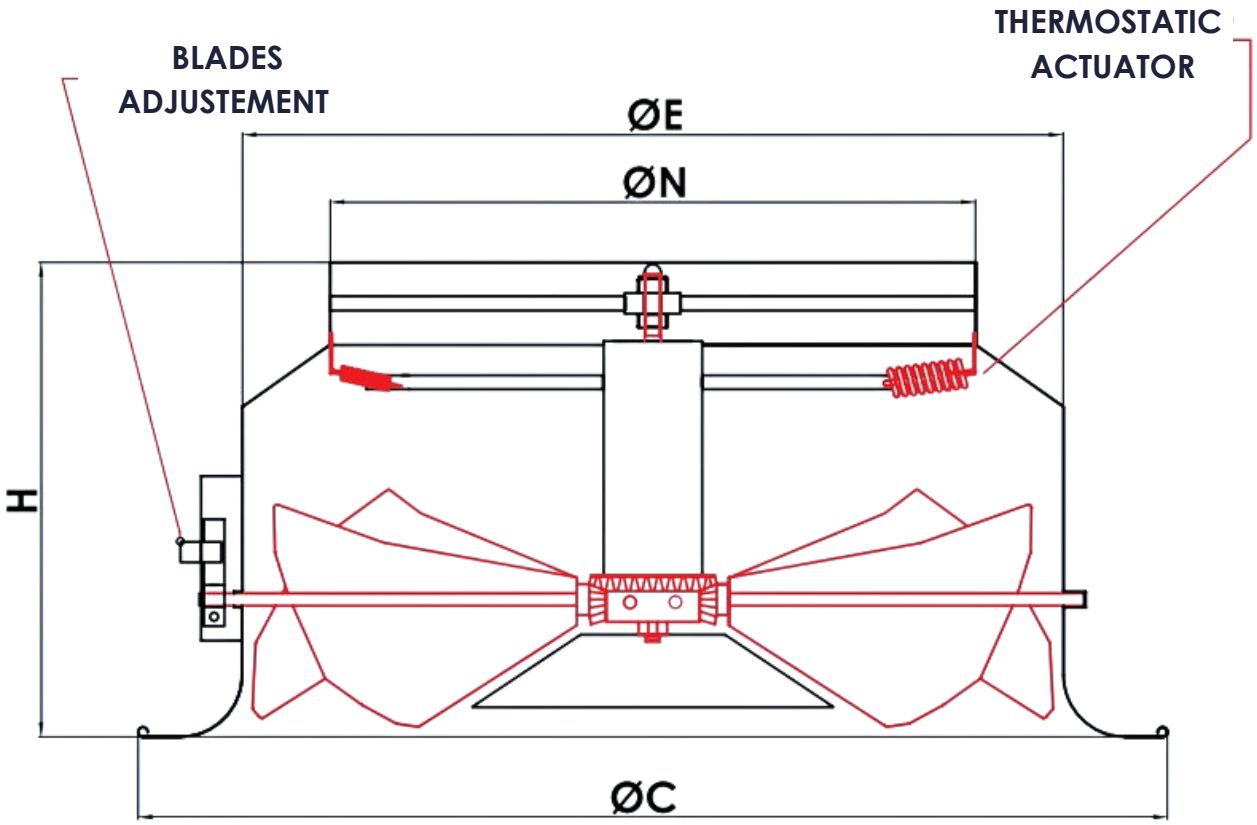

Nominal Size	ØN	ØC	ØE	H
200	198	350	248	180
250	248	400	298	205
315	313	500	398	230
400	398	615	465	270
500	498	780	565	320
630	628	935	665	390

* Models 200, 250, and 315 are also available with a 595x595 mm base plate.

Plenum

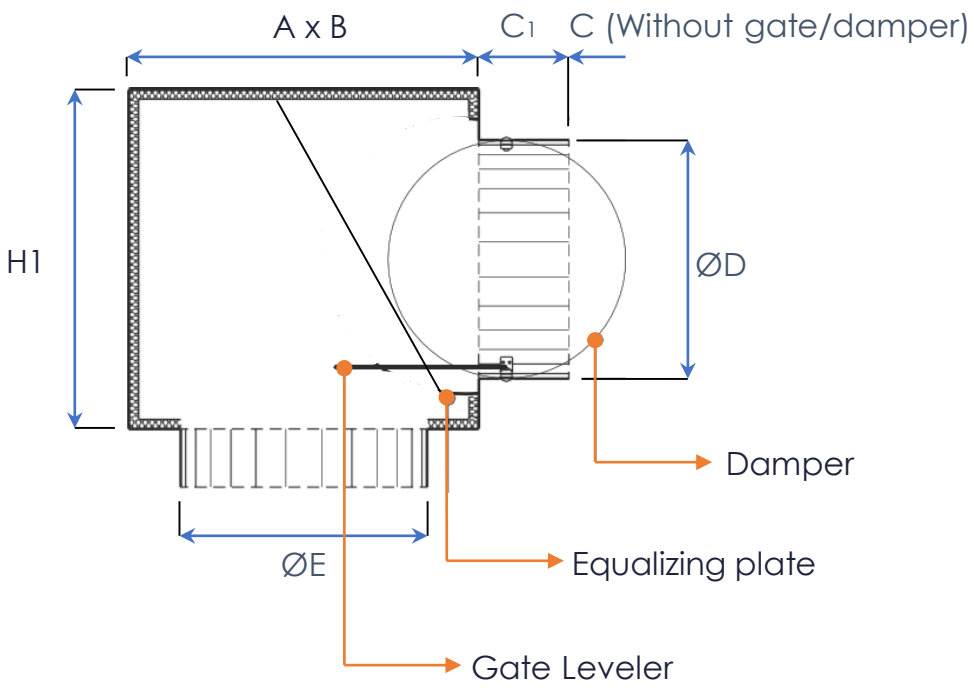

PLENUM DIMENSIONS TABLE

PLENUM	AxB	C	C1	ØD	ØE	H1	Nº Pieces
PLERC200	300x300	60	60	196	202	300	1
PLERC250	350x350	60	60	246	252	350	1
PLERC315	400x400	60	60	311	317	400	1
PLERC400	500x500	90	90	396	402	500	1
PLERC500	600x600	100	100	496	503	600	1
PLERC630	730x730	100	100	600	633	730	1

QUICK SELECTION TABLE

Model	Flow (Q) m3/h	Mounting Height H (m)	Low Temperature				High Temperature			
			ΔT (°C)	Blade Angle (°)	Static Pressure ΔP (mm.ca)	NR dB(A)	ΔT (°C)	Blade Angle (°)	Static Pressure ΔP (mm.ca)	NR dB(A)
200	300	4	-10	47	0,73	34	10	35	0,48	32
250	400	4	-10	47	0,51	30	10	34	0,32	28
200	400	4,5	-10	48	1,36	43	10	36	0,87	41
250	500	4,5	-10	47	0,8	37	10	34	0,51	35
315	600	4,5	-10	43	0,39	26	10	32	0,28	25
250	600	6	-10	44	1,02	42	10	22	0,56	39
315	800	6	-10	41	0,65	34	10	27	0,44	33
315	1200	6	-10	47	1,84	49	10	39	1,36	48
400	1500	6	-10	43	0,96	42	10	34	0,72	41
400	1800	6	-10	46	1,56	48	10	39	1,2	48
500	2000	6	-10	51	0,97	41	10	33	0,5	36
400	2500	8	-10	45	2,89	58	10	38	2,24	57
500	3000	8	-10	51	2,18	53	10	35	1,18	49
500	3500	8	-10	53	3,3	59	10	39	1,81	54
630	3500	8	-10	50	1,15	41	10	28	0,55	36
630	4000	8	-10	52	1,66	47	10	33	0,8	41
630	5000	8	-10	54	2,89	55	10	39	1,5	50
400	3000	10	-10	43	3,85	63	10	35	2,95	62
500	3500	10	-10	50	2,82	57	10	31	1,44	52
500	4000	10	-10	51	3,88	62	10	35	2,09	57
630	4500	10	-10	50	1,9	49	10	27	0,88	43
630	5500	10	-10	52	3,14	57	10	34	1,56	51

- Values calculated based on an occupied zone height of 1.8 m. Terminal Speed V = 0.25 m/s. Unattenuated noise level in the room in NR (dBA).

GRAPHICAL DESCRIPTION

Series	Model	
	200	500
DGVC_AT	250	630
	315	
	400	

Finish
LB
RAL

Accessories
PLE

DGVC250AT – LB + PLE

DESCRIPTION

SERIES

- DGVC_AT: Circular thermostatic diffuser with variable geometry.

MODEL

- DGVC250AT: Circular thermostatic diffuser with variable geometry, model 250.

FINISH

- LB: White laquered.

ACCESSORIES (optional)

- PLE250: Plenum box for DGVC_AT model 250.

Order example: DGVC250AT-LB+PLE250

- To order a circular thermostatic diffuser with variable geometry, model 250, white laquered with plenum box, you should request:

Order	Description
Diffuser DGVC250AT-LB	Circular thermostatic diffuser with variable geometry, model 250, white laquered.
Plenum PLE250	Plenum de conexión con regulación y placa ecualizadora para DGVC250AT.

Order example: DGVC315AT-LB

- To order a circular thermostatic diffuser with variable geometry, model 315, white laquered, you should request:

Order	Description
Diffuser DGVC315AT-LB	Circular thermostatic diffuser with variable geometry, model 315, white laquered.



Any element of this document may be subject to change without notice from Manufacturas Difair-Clima, S.L. CONTAINS INTELLECTUAL PROPERTY. Any partial or total reproduction of the contents without the express authorization of Manufacturas DIFAIR-CLIMA, S.L. is prohibited.
The information contained in this document is based on careful testing and experience. It reflects our knowledge and is for guidance purposes only. It is provided in good faith and the user should satisfy himself that the product is fit for use prior to any application. The values quoted are averages and should not be taken as maximum or minimum values for specific purposes. The manufacturer and distributor are not responsible for any non-recommended use or consequential damage.
THE INFORMATION PROVIDED IN THIS DOCUMENT SUPERSEDES ALL PREVIOUS VERSIONS OF THIS DOCUMENT.

(+34) 91 3235805
(+34) 91 3235703
www.difair.es
info@difair.es
Manufacturas Difair-Clima, S.L.
Avd. del Cno de lo Cortao, 28A, Nave 1
28703 San Sebastián de los Reyes, Madrid.