Difair

Serie DGV_AT



THERMOSTATIC
VARIABLE-GEOMETRY
SWIRL DIFFUSER

(+34) 91 3235805
(+34) 91 3235703

www.difair.es

info@difair.es

Avd. del Cno de lo Cortao, 28A, Nave 1
28703 San Sebastián de los Reyes, Madrid.



DESCRIPTION

Square swirl diffuser with variable geometry and automatic blades that require no power supply, constructed of aluminum with steel blades and finished with epoxy paint. It includes models ranging from **Ø200** to **Ø315**, and its movable blades can be manually adjusted between 0° (fully open) and 90° (fully closed) to control temperature and airflow.

FINISH

- White lacquered diffuser (RAL 9010).
- On request, it can be manufactured in other colors from the **RAL** color chart.

FIXING SYSTEM

- Directly into the duct or via a coupling sleeve.

ACCESSORIES

- **Plenum Box** with damper and equalizing plate.

FEATURES

Depending on the slat angle setting, you can get a stream of warm air (angle from 0° to 45°) or a stream of cool air (angle from 45° to 90°)

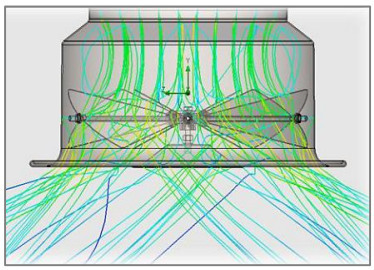

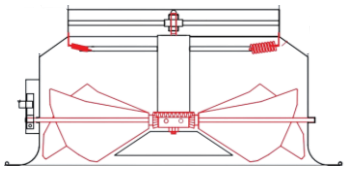

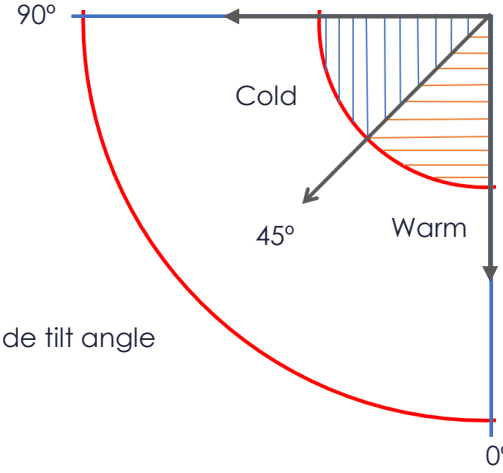

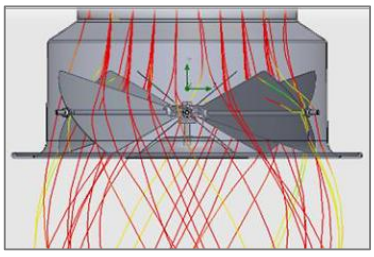

INSTALLATION

Plenum mounting

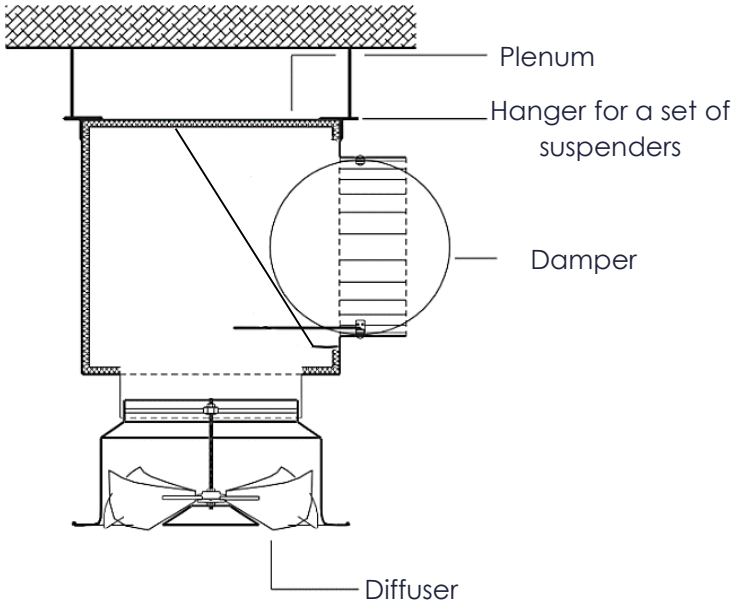

Assembly with a coupling sleeve

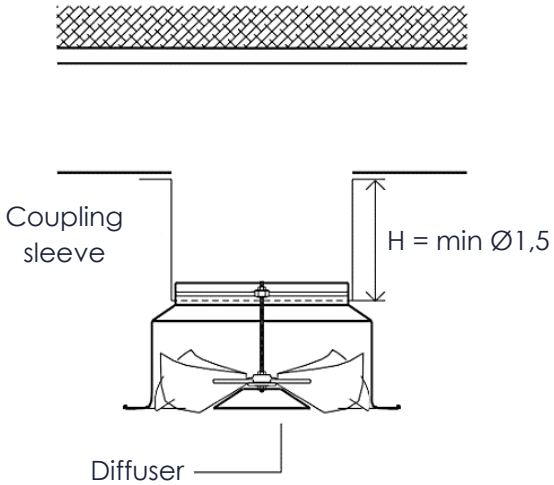

Installation with flexible tube

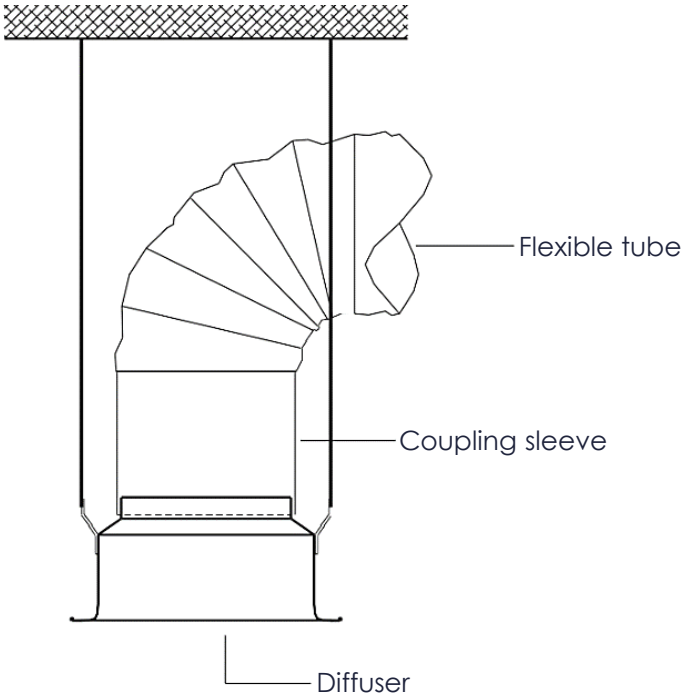

Installation in a circular duct with a couplin sleeve

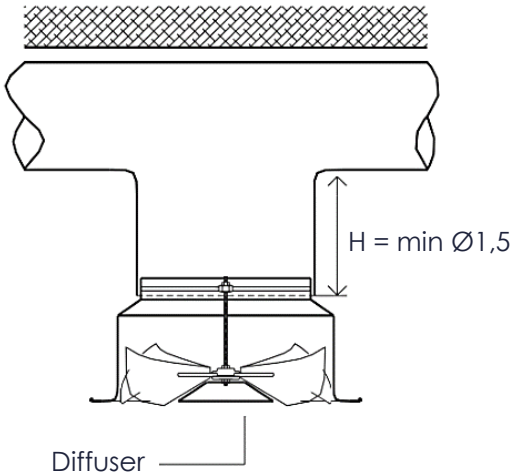

DIMENSIONS

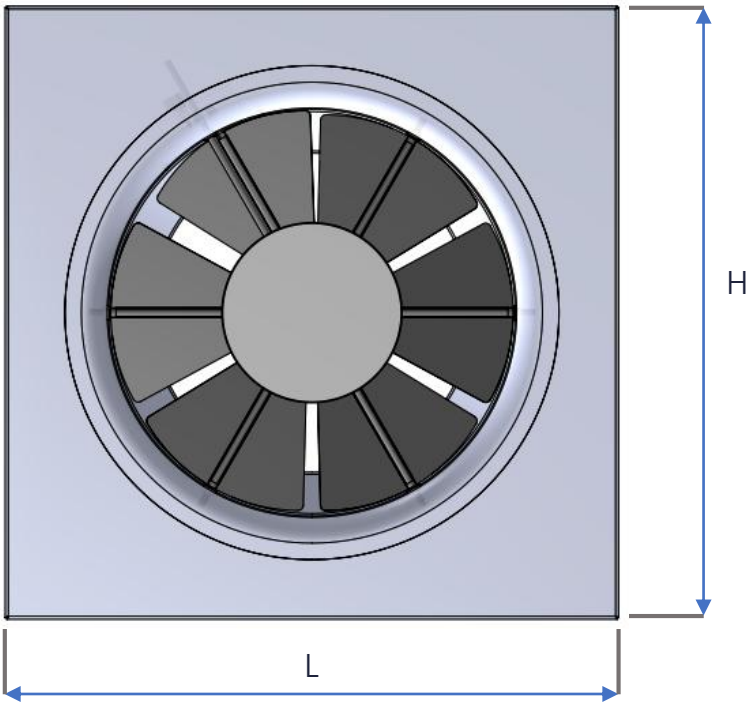

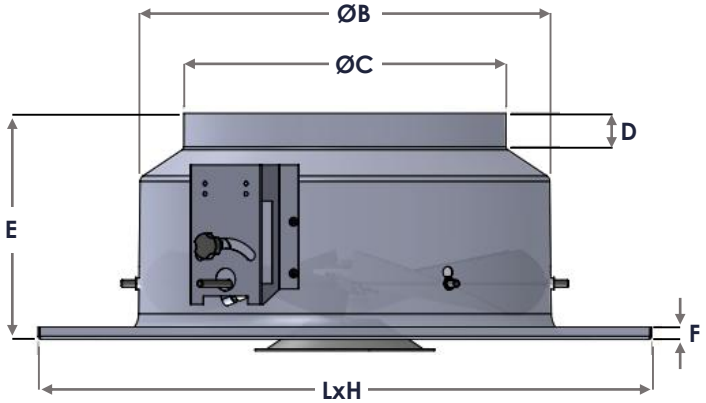

Nominal Size	LxH	ØB	ØC	D	E	F
200	596	248	198	40	180	12
250	596	298	248	40	205	12
315	596	398	313	40	230	12

PLENUM BOX

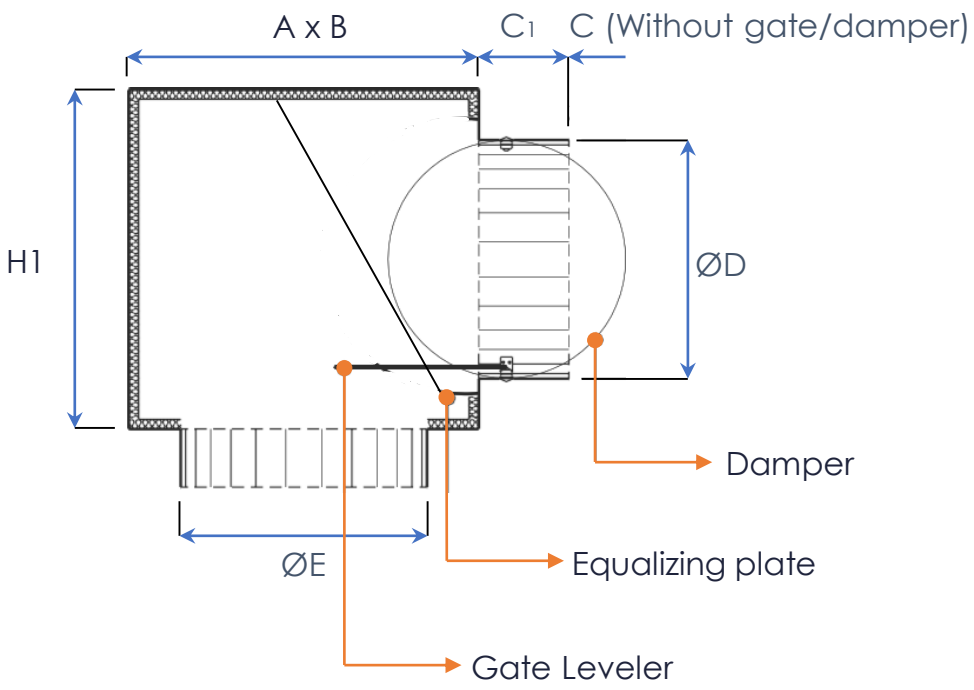

PLENUM DIMENSIONS TABLE

PLENUM	AxB	C	C1	ØD	ØE	H1	Nº Pieces
PLE160	250x250	60	60	156	162	250	1
PLE200	300x300	60	60	196	202	300	1
PLE250	350x350	60	60	246	252	350	1
PLE315	400x400	60	60	311	317	400	1

QUICK SELECTION TABLE

Model	Flow (Q) m3/h	Mounting Height H (m)	Low Temperature				High Temperature			
			ΔT (°C)	Blade Angle (°)	Static Pressure ΔP (mm.ca)	NR dB(A)	ΔT (°C)	Blade Angle (°)	Static Pressure ΔP (mm.ca)	NR dB(A)
160	200	4	-10	43	0,65	36	10	34	0,48	34
200	300	4	-10	47	0,73	34	10	35	0,48	32
250	400	4	-10	47	0,51	30	10	34	0,32	28
160	300	4,5	-10	46	1,64	48	10	37	1,18	47
200	400	4,5	-10	48	1,36	43	10	36	0,87	41
250	500	4,5	-10	47	0,8	37	10	34	0,51	35
315	600	4,5	-10	43	0,39	26	10	32	0,28	25
250	600	6	-10	44	1,02	42	10	22	0,56	39
315	800	6	-10	41	0,65	34	10	27	0,44	33
315	1200	6	-10	47	1,84	49	10	39	1,36	48

- Values calculated based on an occupied zone height of 1.8 m. Terminal Speed V = 0.25 m/s. Unattenuated noise level in the room in NR (dBA).

GRAPHICAL DESCRIPTION

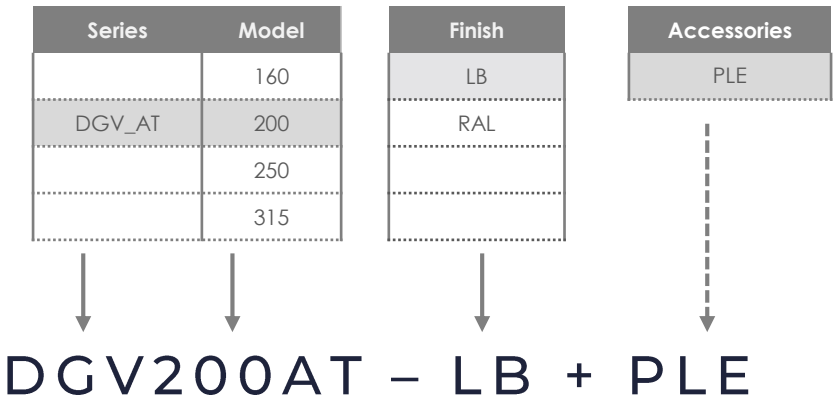

DESCRIPTION

SERIES

- DGV_AT : Thermostatic variable-geometry swirl diffuser.

MODEL

- DGV200AT: Thermostatic variable-geometry swirl diffuser, model 200.

FINISH

- LB: White laquered.

ACCESSORIES (optional)

- PLE200: Plenum box for DGV_AT, model 200.

Order example: DGV200AT-LB+PLE200

- To order a thermostatic variable-geometry swirl diffuser, model 200, White laquered with plenum box, you should request:

Order	Description
Swirl diffuser DGV200AT-LB	Thermostatic variable-geometry swirl diffuser, model 200, White lacquered.
Plenum PLE200	Plenum box for DGV_AT, model 200.

Order example: DGV315AT-LB

- To order a thermostatic variable-geometry swirl diffuser, model 315, White laquered, you should request:

Order	Description
Swirl diffuser DGV315AT-LB	Thermostatic variable-geometry swirl diffuser, model 315, White laquered.



Any element of this document may be subject to change without notice from Manufacturas Difair-Clima, S.L. CONTAINS INTELLECTUAL PROPERTY. Any partial or total reproduction of the contents without the express authorization of Manufacturas DIFAIR-CLIMA, S.L. is prohibited.
The information contained in this document is based on careful testing and experience. It reflects our knowledge and is for guidance purposes only. It is provided in good faith and the user should satisfy himself that the product is fit for use prior to any application. The values quoted are averages and should not be taken as maximum or minimum values for specific purposes. The manufacturer and distributor are not responsible for any non-recommended use or consequential damage.
THE INFORMATION PROVIDED IN THIS DOCUMENT SUPERSEDES ALL PREVIOUS VERSIONS OF THIS DOCUMENT.

(+34) 91 3235805
(+34) 91 3235703
www.difair.es
info@difair.es
Manufacturas Difair-Clima, S.L.
Avd. del Cno de lo Cortao, 28A, Nave 1
28703 San Sebastián de los Reyes, Madrid.